## TAPADA DE 0.50 m. a 3.00 m.

| LUZ | Altura | ESPESORES | | BARRAS I | | | | | | BARRAS II | | | | | | | | | BARRAS III | | | | | | | BARRAS IV | | | | | | BARRAS V | | | | | | | BARRAS VI | | | | | BARRAS VII | | | | | BARRAS VIII | | | | vol. hor. p/m. de alc.m/m³ | peso hie. rro pulg. p/m de alc.kg/m | peso hie. rro mm. p/m de alc.kg/m |
|---|---|---|---|---|---|---|---|---|---|---|---|---|---|---|---|---|---|---|---|---|---|---|---|---|---|---|---|---|---|---|---|---|---|---|---|---|---|---|---|---|---|---|---|---|---|---|---|---|---|---|---|---|---|---|---|---|---|
| L | H | a | b | DIAMETRO | | SEP. | DIAM. | SEP. | C | DIAMETRO | | SEP. | DIAM. | SEP. | d | e | f | g | DIAMETRO | | SEP. | DIAM. | SEP. | h | i | DIAMETRO | | SEP. | DIAM. | SEP. | j | DIAMETRO | | SEP. | DIAM. | SEP. | k | l | DIAMETRO | | SEP. | DIAM. | SEP. | DIAMETRO | | SEP. | DIAM. | SEP. | DIAMETRO | | DIAM. | CANT. | | | |
| cm. | cm. | cm. | cm. | pulg. | mm. | cm. | mm. | cm. | cm. | pulg. | mm. | cm. | mm. | cm. | cm. | cm. | cm. | cm. | pulg. | mm. | cm. | mm. | cm. | cm. | cm. | pulg. | mm. | cm. | mm. | cm. | cm. | pulg. | mm. | cm. | mm. | cm. | cm. | cm. | pulg. | mm. | cm. | mm. | cm. | pulg. | mm. | cm. | mm. | cm. | pulg. | mm. | mm. | --- | | | |
| 100 | 100 | 16 | 20 | 5/16 | 7.94 | 25 | 8 | 25 | 130 | 5/16 | 7.94 | 25 | 8 | 25 | 15 | 11.3 | 8 | 84 | 3/8 | 9.52 | 50 | 10 | 51 | 40 | 124 | 3/8 | 9.52 | 30 | 10 | 32 | 119 | 3/8 | 9.52 | 50 | 10 | 51 | 40 | 42 | 5/16 | 7.94 | 33 | 8 | 33 | 5/16 | 7.94 | 33 | 8 | 33 | 5/16 | 7.94 | 8 | 3 | | | |
| | 150 | 16 | 20 | 5/16 | 7.94 | 30 | 8 | 30 | 130 | 5/16 | 7.94 | 30 | 8 | 30 | 15 | 11.3 | 8 | 84 | 3/8 | 9.52 | 33 | 10 | 34 | 48 | 174 | 3/8 | 9.52 | 30 | 10 | 32 | 169 | 3/8 | 9.52 | 33 | 10 | 34 | 48 | 48 | 5/16 | 7.94 | 33 | 8 | 33 | 5/16 | 7.94 | 30 | 8 | 30 | 5/16 | 7.94 | 8 | 3 | | | |
| 150 | 100 | 16 | 20 | 1/2 | 12.70 | 33 | 12 | 29 | 178 | 1/2 | 12.70 | 33 | 12 | 29 | 25 | 11.3 | 8 | 112 | 3/8 | 9.52 | 25 | 10 | 26 | 57 | 124 | 3/8 | 9.52 | 30 | 10 | 32 | 119 | 3/8 | 9.52 | 25 | 10 | 26 | 57 | 45 | 3/8 | 9.52 | 30 | 10 | 30 | 3/8 | 9.52 | 33 | 10 | 33 | 3/8 | 9.52 | 10 | 3 | | | |
| | 150 | 16 | 20 | 1/2 | 12.70 | 30 | 12 | 26 | 178 | 1/2 | 12.70 | 30 | 12 | 26 | 25 | 11.3 | 8 | 112 | 3/8 | 9.52 | 33 | 10 | 34 | 57 | 174 | 3/8 | 9.52 | 30 | 10 | 32 | 169 | 3/8 | 9.52 | 33 | 10 | 34 | 57 | 55 | 3/8 | 9.52 | 30 | 10 | 30 | 3/8 | 9.52 | 30 | 10 | 30 | 3/8 | 9.52 | 10 | 3 | | | |
| | 200 | 18 | 20 | 1/2 | 12.70 | 33 | 12 | 29 | 178 | 1/2 | 12.70 | 33 | 12 | 29 | 25 | 14.1 | 18 | 112 | 1/2 | 12.70 | 50 | 12 | 46 | 57 | 228 | 3/8 | 9.52 | 30 | 10 | 32 | 223 | 1/2 | 12.70 | 50 | 12 | 46 | 57 | 70 | 3/8 | 9.52 | 30 | 10 | 30 | 3/8 | 9.52 | 33 | 10 | 33 | 3/8 | 9.52 | 10 | 3 | | | |
| 200 | 150 | 18 | 20 | 1/2 | 12.70 | 24 | 12 | 20 | 228 | 1/2 | 12.70 | 24 | 12 | 20 | 30 | 14.1 | 10 | 148 | 1/2 | 12.70 | 33 | 12 | 29 | 75 | 178 | 3/8 | 9.52 | 30 | 10 | 32 | 173 | 1/2 | 12.70 | 33 | 12 | 29 | 75 | 55 | 3/8 | 9.52 | 33 | 12 | 33 | 3/8 | 9.52 | 30 | 12 | 25 | 3/8 | 9.52 | 10 | 4 | | | |
| | 200 | 18 | 20 | 1/2 | 12.70 | 22 | 12 | 18 | 228 | 1/2 | 12.70 | 22 | 12 | 18 | 30 | 14.1 | 10 | 148 | 1/2 | 12.70 | 40 | 12 | 36 | 72 | 228 | 3/8 | 9.52 | 30 | 10 | 32 | 223 | 1/2 | 12.70 | 40 | 12 | 36 | 72 | 70 | 3/8 | 9.52 | 33 | 12 | 33 | 3/8 | 9.52 | 33 | 12 | 25 | 3/8 | 9.52 | 10 | 4 | | | |

## TAPADA DE 3.00 m. a 5.00 m.

| LUZ | Altura | ESPESORES | | BARRAS I | | | | | | BARRAS II | | | | | | | | | BARRAS III | | | | | | | BARRAS IV | | | | | | BARRAS V | | | | | | | BARRAS VI | | | | | BARRAS VII | | | | | BARRAS VIII | | | | vol. hor. p/m. de alc.m/m³ | peso hie. rro pulg. p/m de alc.kg/m | peso hie. rro mm. p/m de alc.kg/m |
|---|---|---|---|---|---|---|---|---|---|---|---|---|---|---|---|---|---|---|---|---|---|---|---|---|---|---|---|---|---|---|---|---|---|---|---|---|---|---|---|---|---|---|---|---|---|---|---|---|---|---|---|---|---|---|---|---|---|
| L | H | a | b | DIAMETRO | | SEP. | DIAM. | SEP. | C | DIAMETRO | | SEP. | DIAM. | SEP. | d | e | f | g | DIAMETRO | | SEP. | DIAM. | SEP. | h | i | DIAMETRO | | SEP. | DIAM. | SEP. | j | DIAMETRO | | SEP. | DIAM. | SEP. | k | l | DIAMETRO | | SEP. | DIAM. | SEP. | DIAMETRO | | SEP. | DIAM. | SEP. | DIAMETRO | | DIAM. | CANT. | | | |
| cm. | cm. | cm. | cm. | pulg. | mm. | cm. | mm. | cm. | cm. | pulg. | mm. | cm. | mm. | cm. | cm. | cm. | cm. | cm. | pulg. | mm. | cm. | mm. | cm. | cm. | cm. | pulg. | mm. | cm. | mm. | cm. | cm. | pulg. | mm. | cm. | mm. | cm. | cm. | cm. | pulg. | mm. | cm. | mm. | cm. | pulg. | mm. | cm. | mm. | cm. | pulg. | mm. | mm. | --- | | | |
| 100 | 100 | 18 | 20 | 3/8 | 9.52 | 30 | 10 | 32 | 129 | 3/8 | 9.52 | 30 | 10 | 32 | 15 | 14.1 | 10 | 79 | 3/8 | 9.52 | 50 | 10 | 51 | 40 | 128 | 3/8 | 9.52 | 30 | 10 | 32 | 123 | 3/8 | 9.52 | 50 | 10 | 51 | 40 | 42 | 5/16 | 7.94 | 25 | 8 | 25 | 5/16 | 7.94 | 25 | 8 | 25 | 5/16 | 7.94 | 8 | 3 | | | |
| | 150 | 18 | 22 | 3/8 | 9.52 | 25 | 10 | 27 | 133 | 3/8 | 9.52 | 25 | 10 | 27 | 15 | 14.1 | 10 | 83 | 3/8 | 9.52 | 33 | 10 | 34 | 40 | 178 | 3/8 | 9.52 | 30 | 10 | 32 | 173 | 3/8 | 9.52 | 33 | 10 | 34 | 40 | 48 | 5/16 | 7.94 | 25 | 8 | 25 | 5/16 | 7.94 | 25 | 8 | 25 | 5/16 | 7.94 | 8 | 3 | | | |
| 150 | 100 | 18 | 20 | 1/2 | 12.70 | 24 | 12 | 20 | 178 | 1/2 | 12.70 | 24 | 12 | 20 | 25 | 14.1 | 10 | 108 | 1/2 | 12.70 | 33 | 12 | 29 | 57 | 128 | 3/8 | 9.52 | 30 | 10 | 32 | 123 | 1/2 | 12.70 | 33 | 12 | 29 | 57 | 45 | 3/8 | 9.52 | 25 | 10 | 30 | 3/8 | 9.52 | 25 | 10 | 25 | 3/8 | 9.52 | 10 | 3 | | | |
| | 150 | 18 | 20 | 1/2 | 12.70 | 24 | 12 | 20 | 178 | 1/2 | 12.70 | 24 | 12 | 20 | 25 | 14.1 | 10 | 108 | 1/2 | 12.70 | 40 | 12 | 36 | 57 | 178 | 3/8 | 9.52 | 30 | 10 | 32 | 173 | 1/2 | 12.70 | 40 | 12 | 36 | 57 | 55 | 3/8 | 9.52 | 25 | 10 | 30 | 3/8 | 9.52 | 25 | 10 | 25 | 3/8 | 9.52 | 10 | 3 | | | |
| | 200 | 20 | 22 | 5/8 | 15.88 | 40 | 16 | 41 | 180 | 5/8 | 15.88 | 40 | 16 | 41 | 25 | 17.0 | 12 | 106 | 1/2 | 12.70 | 50 | 12 | 46 | 57 | 232 | 3/8 | 9.52 | 30 | 10 | 32 | 226 | 1/2 | 12.70 | 50 | 12 | 46 | 57 | 70 | 3/8 | 9.52 | 25 | 10 | 30 | 1/2 | 12.70 | 25 | 12 | 25 | 3/8 | 9.52 | 10 | 3 | | | |
| 200 | 150 | 21 | 20 | 5/8 | 15.88 | 24 | 16 | 25 | 116 | 5/8 | 15.88 | 24 | 16 | 25 | 30 | 18.4 | 13 | 140 | 1/2 | 12.70 | 22 | 12 | 18 | 70 | 184 | 3/8 | 9.52 | 30 | 10 | 32 | 179 | 1/2 | 12.70 | 22 | 12 | 18 | 70 | 55 | 1/2 | 12.70 | 25 | 12 | 25 | 3/8 | 9.52 | 25 | 10 | 25 | 3/8 | 9.52 | 10 | 4 | | | |
| | 200 | 26 | 22 | 3/4 | 19.05 | 30 | 20 | 34 | 228 | 3/4 | 19.05 | 30 | 20 | 34 | 30 | 25.2 | 18 | 132 | 1/2 | 12.70 | 40 | 12 | 36 | 65 | 244 | 3/8 | 9.52 | 30 | 10 | 32 | 239 | 1/2 | 12.70 | 40 | 12 | 36 | 65 | 70 | 1/2 | 12.70 | 25 | 12 | 25 | 1/2 | 12.70 | 25 | 12 | 25 | 3/8 | 9.52 | 10 | 4 | | | |

## TAPADA DE 5.00 m. a 7.50 m.

| LUZ | Altura | ESPESORES | | BARRAS I | | | | | | BARRAS II | | | | | | | | | BARRAS III | | | | | | | BARRAS IV | | | | | | BARRAS V | | | | | | | BARRAS VI | | | | | BARRAS VII | | | | | BARRAS VIII | | | | vol. hor. p/m. de alc.m/m³ | peso hie. rro pulg. p/m de alc.kg/m | peso hie. rro mm. p/m de alc.kg/m |
|---|---|---|---|---|---|---|---|---|---|---|---|---|---|---|---|---|---|---|---|---|---|---|---|---|---|---|---|---|---|---|---|---|---|---|---|---|---|---|---|---|---|---|---|---|---|---|---|---|---|---|---|---|---|---|---|---|---|
| L | H | a | b | DIAMETRO | | SEP. | DIAM. | SEP. | C | DIAMETRO | | SEP. | DIAM. | SEP. | d | e | f | g | DIAMETRO | | SEP. | DIAM. | SEP. | h | i | DIAMETRO | | SEP. | DIAM. | SEP. | j | DIAMETRO | | SEP. | DIAM. | SEP. | k | l | DIAMETRO | | SEP. | DIAM. | SEP. | DIAMETRO | | SEP. | DIAM. | SEP. | DIAMETRO | | DIAM. | CANT. | | | |
| cm. | cm. | cm. | cm. | pulg. | mm. | cm. | mm. | cm. | cm. | pulg. | mm. | cm. | mm. | cm. | cm. | cm. | cm. | cm. | pulg. | mm. | cm. | mm. | cm. | cm. | cm. | pulg. | mm. | cm. | mm. | cm. | cm. | pulg. | mm. | cm. | mm. | cm. | cm. | cm. | pulg. | mm. | cm. | mm. | cm. | pulg. | mm. | cm. | mm. | cm. | pulg. | mm. | mm. | --- | | | |
| 100 | 100 | 24 | 20 | 1/2 | 12.70 | 40 | 12 | 36 | 128 | 1/2 | 12.70 | 40 | 12 | 36 | 15 | 22.6 | 16 | 66 | 1/2 | 12.70 | 40 | 12 | 36 | 40 | 140 | 3/8 | 9.52 | 30 | 10 | 32 | 135 | 1/2 | 12.70 | 40 | 12 | 36 | 40 | 42 | 3/8 | 9.52 | 33 | 10 | 33 | 3/8 | 9.52 | 33 | 10 | 33 | 3/8 | 9.52 | 10 | 3 | | | |
| | 150 | 20 | 22 | 3/8 | 9.52 | 20 | 10 | 21 | 133 | 3/8 | 9.52 | 20 | 10 | 21 | 15 | 17.0 | 12 | 79 | 3/8 | 9.52 | 33 | 10 | 34 | 40 | 182 | 3/8 | 9.52 | 30 | 10 | 32 | 177 | 3/8 | 9.52 | 33 | 10 | 34 | 40 | 48 | 1/2 | 12.70 | 33 | 12 | 25 | 1/2 | 12.70 | 30 | 12 | 25 | 1/2 | 12.70 | 10 | 3 | | | |
| 150 | 100 | 22 | 20 | 5/8 | 15.88 | 25 | 16 | 25 | 176 | 5/8 | 15.88 | 25 | 16 | 25 | 25 | 19.8 | 14 | 98 | 1/2 | 12.70 | 33 | 12 | 29 | 55 | 136 | 3/8 | 9.52 | 30 | 10 | 32 | 131 | 1/2 | 12.70 | 33 | 12 | 29 | 55 | 45 | 1/2 | 12.70 | 30 | 12 | 25 | 1/2 | 12.70 | 33 | 12 | 25 | 1/2 | 12.70 | 12 | 3 | | | |
| | 150 | 22 | 20 | 5/8 | 15.88 | 25 | 16 | 25 | 176 | 5/8 | 15.88 | 25 | 16 | 25 | 25 | 19.8 | 14 | 98 | 1/2 | 12.70 | 28 | 12 | 24 | 57 | 186 | 3/8 | 9.52 | 30 | 10 | 32 | 181 | 1/2 | 12.70 | 28 | 12 | 24 | 57 | 55 | 1/2 | 12.70 | 30 | 12 | 25 | 1/2 | 12.70 | 30 | 12 | 25 | 1/2 | 12.70 | 12 | 3 | | | |
| | 200 | 22 | 22 | 5/8 | 15.88 | 28 | 16 | 28 | 180 | 5/8 | 15.88 | 28 | 16 | 28 | 25 | 19.8 | 14 | 102 | 1/2 | 12.70 | 40 | 12 | 36 | 57 | 236 | 3/8 | 9.52 | 30 | 10 | 32 | 231 | 1/2 | 12.70 | 40 | 12 | 36 | 57 | 70 | 1/2 | 12.70 | 30 | 12 | 25 | 1/2 | 12.70 | 25 | 12 | 25 | 1/2 | 12.70 | 12 | 3 | | | |
| 200 | 150 | 26 | 22 | 3/4 | 19.05 | 28 | 20 | 30 | 228 | 3/4 | 19.05 | 28 | 20 | 30 | 30 | 25.2 | 18 | 132 | 1/2 | 12.70 | 22 | 12 | 18 | 68 | 194 | 3/8 | 9.52 | 30 | 10 | 32 | 189 | 1/2 | 12.70 | 22 | 12 | 18 | 68 | 55 | 1/2 | 12.70 | 25 | 12 | 20 | 1/2 | 12.70 | 30 | 12 | 25 | 1/2 | 12.70 | 12 | 4 | | | |
| | 200 | 28 | 25 | 3/4 | 19.05 | 30 | 20 | 32 | 234 | 3/4 | 19.05 | 30 | 20 | 32 | 30 | 28.1 | 20 | 134 | 1/2 | 12.70 | 28 | 12 | 24 | 70 | 248 | 3/8 | 9.52 | 30 | 10 | 32 | 243 | 1/2 | 12.70 | 28 | 12 | 24 | 70 | 70 | 1/2 | 12.70 | 25 | 12 | 20 | 1/2 | 12.70 | 25 | 12 | 25 | 1/2 | 12.70 | 12 | 4 | | | |

## TAPADA DE 7.50 m. a 10.00 m.

| LUZ | Altura | ESPESORES | | BARRAS I | | | | | | BARRAS II | | | | | | | | | BARRAS III | | | | | | | BARRAS IV | | | | | | BARRAS V | | | | | | | BARRAS VI | | | | | BARRAS VII | | | | | BARRAS VIII | | | | vol. hor. p/m. de alc.m/m³ | peso hie. rro pulg. p/m de alc.kg/m | peso hie. rro mm. p/m de alc.kg/m |
|---|---|---|---|---|---|---|---|---|---|---|---|---|---|---|---|---|---|---|---|---|---|---|---|---|---|---|---|---|---|---|---|---|---|---|---|---|---|---|---|---|---|---|---|---|---|---|---|---|---|---|---|---|---|---|---|---|---|
| L | H | a | b | DIAMETRO | | SEP. | DIAM. | SEP. | C | DIAMETRO | | SEP. | DIAM. | SEP. | d | e | f | g | DIAMETRO | | SEP. | DIAM. | SEP. | h | i | DIAMETRO | | SEP. | DIAM. | SEP. | j | DIAMETRO | | SEP. | DIAM. | SEP. | k | l | DIAMETRO | | SEP. | DIAM. | SEP. | DIAMETRO | | SEP. | DIAM. | SEP. | DIAMETRO | | DIAM. | CANT. | | | |
| cm. | cm. | cm. | cm. | pulg. | mm. | cm. | mm. | cm. | cm. | pulg. | mm. | cm. | mm. | cm. | cm. | cm. | cm. | cm. | pulg. | mm. | cm. | mm. | cm. | cm. | cm. | pulg. | mm. | cm. | mm. | cm. | cm. | pulg. | mm. | cm. | mm. | cm. | cm. | cm. | pulg. | mm. | cm. | mm. | cm. | pulg. | mm. | cm. | mm. | cm. | pulg. | mm. | mm. | --- | | | |
| 100 | 100 | 26 | 20 | 5/8 | 15.88 | 40 | 16 | 40 | 126 | 5/8 | 15.88 | 40 | 16 | 40 | 15 | 25.1 | 18 | 60 | 1/2 | 12.70 | 40 | 12 | 36 | 40 | 144 | 3/8 | 9.52 | 30 | 10 | 32 | 139 | 1/2 | 12.70 | 40 | 12 | 36 | 40 | 42 | 1/2 | 12.70 | 33 | 12 | 25 | 1/2 | 12.70 | 33 | 12 | 25 | 1/2 | 12.70 | 12 | 3 | | | |
| | 150 | 22 | 22 | 1/2 | 12.70 | 25 | 12 | 21 | 132 | 1/2 | 12.70 | 25 | 12 | 21 | 15 | 19.8 | 14 | 74 | 3/8 | 9.52 | 33 | 10 | 34 | 40 | 186 | 3/8 | 9.52 | 30 | 10 | 32 | 181 | 3/8 | 9.52 | 33 | 10 | 34 | 40 | 48 | 1/2 | 12.70 | 33 | 12 | 25 | 1/2 | 12.70 | 30 | 12 | 25 | 1/2 | 12.70 | 12 | 3 | | | |
| 150 | 100 | 28 | 20 | 5/8 | 15.88 | 25 | 16 | 25 | 176 | 5/8 | 15.88 | 25 | 16 | 25 | 25 | 28.1 | 20 | 86 | 1/2 | 12.70 | 25 | 12 | 21 | 55 | 148 | 3/8 | 9.52 | 30 | 10 | 32 | 143 | 1/2 | 12.70 | 25 | 12 | 21 | 55 | 45 | 1/2 | 12.70 | 30 | 12 | 25 | 1/2 | 12.70 | 33 | 12 | 25 | 1/2 | 12.70 | 12 | 3 | | | |
| | 150 | 26 | 20 | 5/8 | 15.88 | 25 | 16 | 25 | 176 | 5/8 | 15.88 | 25 | 16 | 25 | 25 | 25.2 | 18 | 90 | 1/2 | 12.70 | 28 | 12 | 24 | 55 | 194 | 3/8 | 9.52 | 30 | 10 | 32 | 189 | 1/2 | 12.70 | 28 | 12 | 24 | 55 | 55 | 1/2 | 12.70 | 30 | 12 | 25 | 1/2 | 12.70 | 30 | 12 | 25 | 1/2 | 12.70 | 12 | 3 | | | |
| | 200 | 24 | 22 | 3/4 | 19.05 | 30 | 20 | 32 | 178 | 3/4 | 19.05 | 30 | 20 | 32 | 25 | 22.6 | 16 | 96 | 1/2 | 12.70 | 33 | 12 | 29 | 55 | 240 | 3/8 | 9.52 | 30 | 10 | 32 | 235 | 1/2 | 12.70 | 33 | 12 | 29 | 55 | 70 | 1/2 | 12.70 | 30 | 12 | 25 | 1/2 | 12.70 | 25 | 12 | 25 | 1/2 | 12.70 | 12 | 3 | | | |
| 200 | 150 | 28 | 23 | 3/4 | 19.05 | 22 | 20 | 24 | 230 | 3/4 | 19.05 | 22 | 20 | 24 | 30 | 28.1 | 20 | 130 | 5/8 | 15.88 | 30 | 16 | 30 | 68 | 198 | 3/8 | 9.52 | 30 | 10 | 32 | 193 | 5/8 | 15.88 | 30 | 16 | 30 | 68 | 55 | 1/2 | 12.70 | 25 | 12 | 20 | 1/2 | 12.70 | 30 | 12 | 25 | 1/2 | 12.70 | 12 | 4 | | | |
| | 200 | 36 | 32 | 3/4 | 19.05 | 28 | 20 | 30 | 248 | 3/4 | 19.05 | 28 | 20 | 30 | 30 | 39.6 | 28 | 132 | 1/2 | 12.70 | 28 | 12 | 24 | 70 | 264 | 3/8 | 9.52 | 30 | 10 | 32 | 259 | 1/2 | 12.70 | 28 | 12 | 24 | 70 | 70 | 1/2 | 12.70 | 25 | 12 | 20 | 1/2 | 12.70 | 25 | 12 | 25 | 1/2 | 12.70 | 12 | 4 | | | |

PARA CONSTRUIR LA ALCANTARILLA, SE LA DIVIDIRA LONGITUDINALMENTE EN SECCIONES NO MENORES DE 5.00m. DE LARGO NI MAYORES DE 10.00m. ENTRE CADA DOS PARTES CONSECUTIVAS SE INTERCALARA (SEGUN DETALLE) UNA JUNTA PREMOLDEADA DE 1.5cm. DE ESPESOR Y DE MATERIAL ASFALTICO Ó ALQUITRAN SEGUN ESPECIFICACION.

**NOTA:** LA TAPADA DE TIERRA MINIMA SOBRE LA ALCANTARILLA SERA DE 0.50m. CUANDO SE TEMAN DESGASTES PRODUCIDOS POR EL ARRASTRE DE GRAVA SE AÑADIRAN 2cm. A LOS RECUBRIMIENTOS DE LAS PAREDES LATERALES Y DE LA LOSA DEL FONDO. LA PENDIENTE MINIMA DEL LECHO DA LA ALCANTARILLA SERA DEL 2% Y LA MAXIMA DE 20%. TODAS LAS ARISTAS EXPUESTAS SE ACHAFLANARAN 2.5cm.

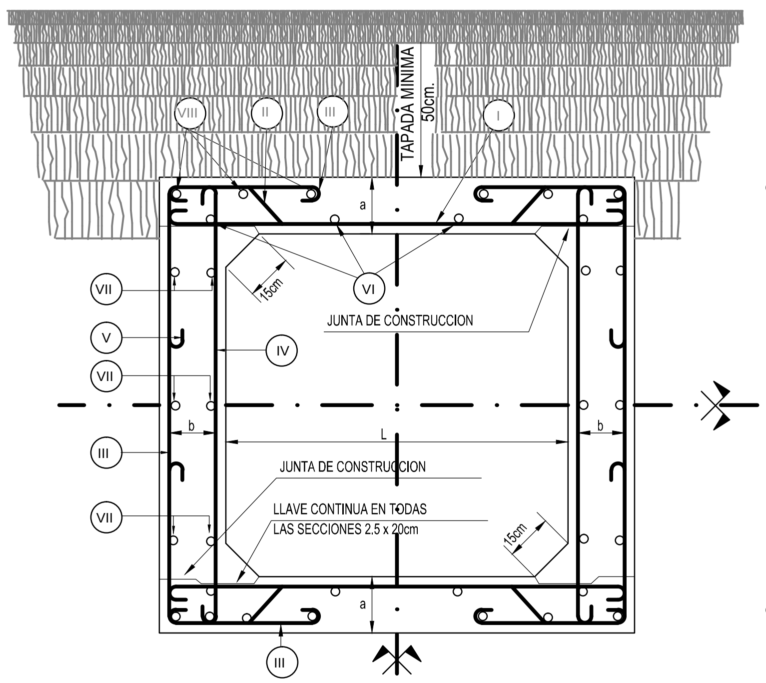


## DETALLE DE LA JUNTA

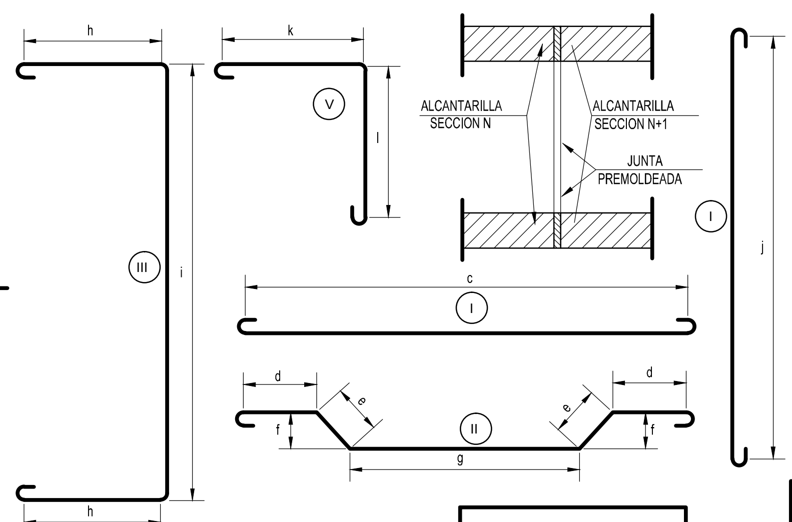


## CORTE 1-1

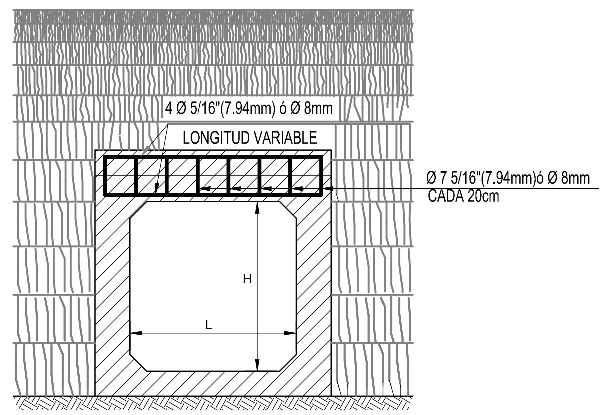


## DINTEL

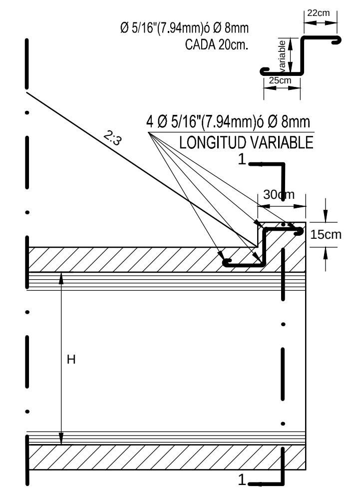


PLANO A AGREGAR: J-2557 MURO DE VUELTA Y ALA

**MATERIALES**
HORMIGÓN H21
ACERO ADN420

Ministerio de Transporte
Presidencia de la Nación
VIALIDAD NACIONAL

UNGARO, ALE ORTIZ INGENIEROS ASOCIADOS S.A.

ALCANTARILLA CAJON PARA LUCES ALTURAS Y TAPADAS DE TIERRA VARIABLE

PLANO TIPO: X-372

ES COPIA FIEL DE SU ORIGINAL